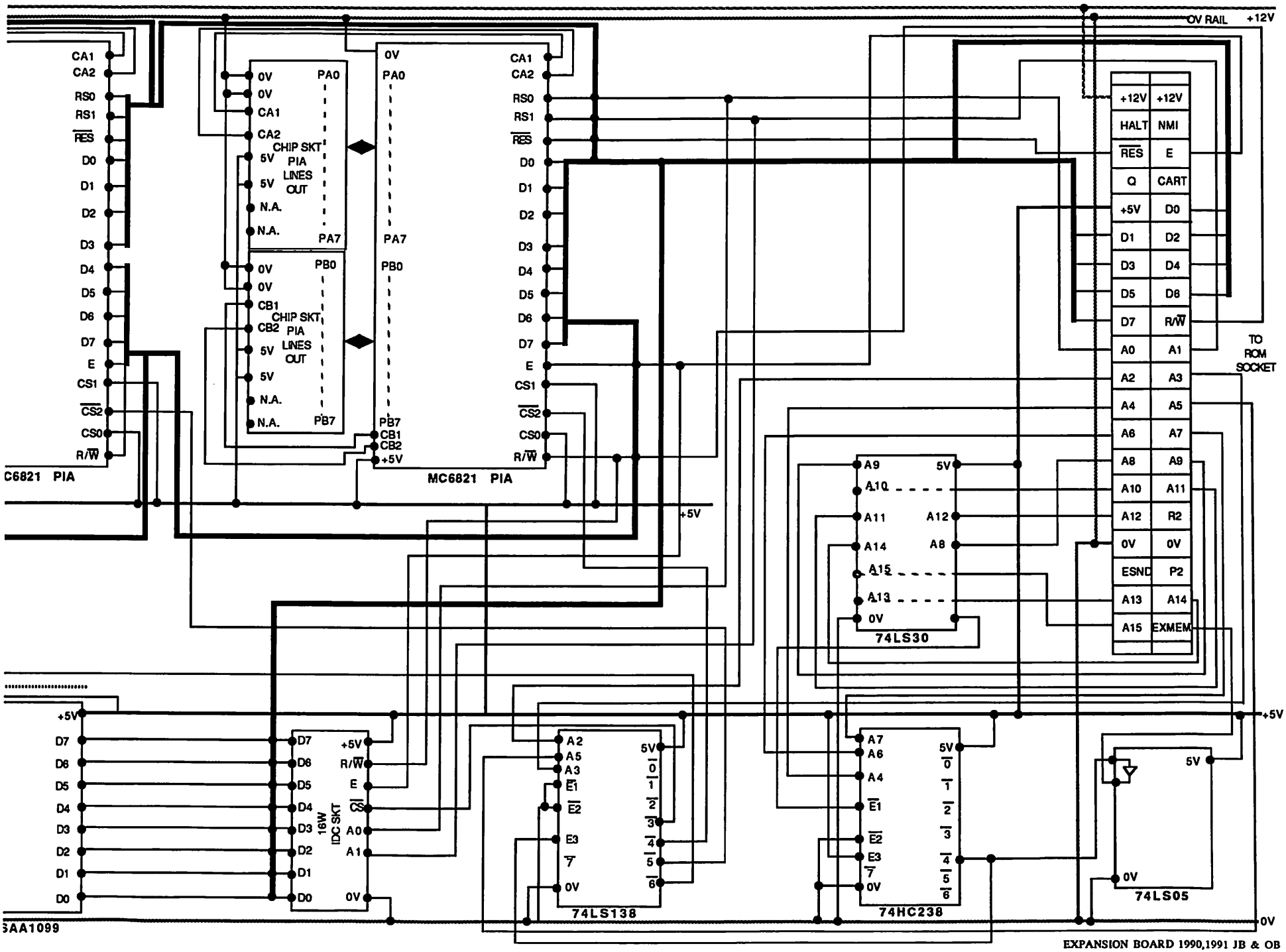

EXPANSION BOARD 1990,1991 JB & OB

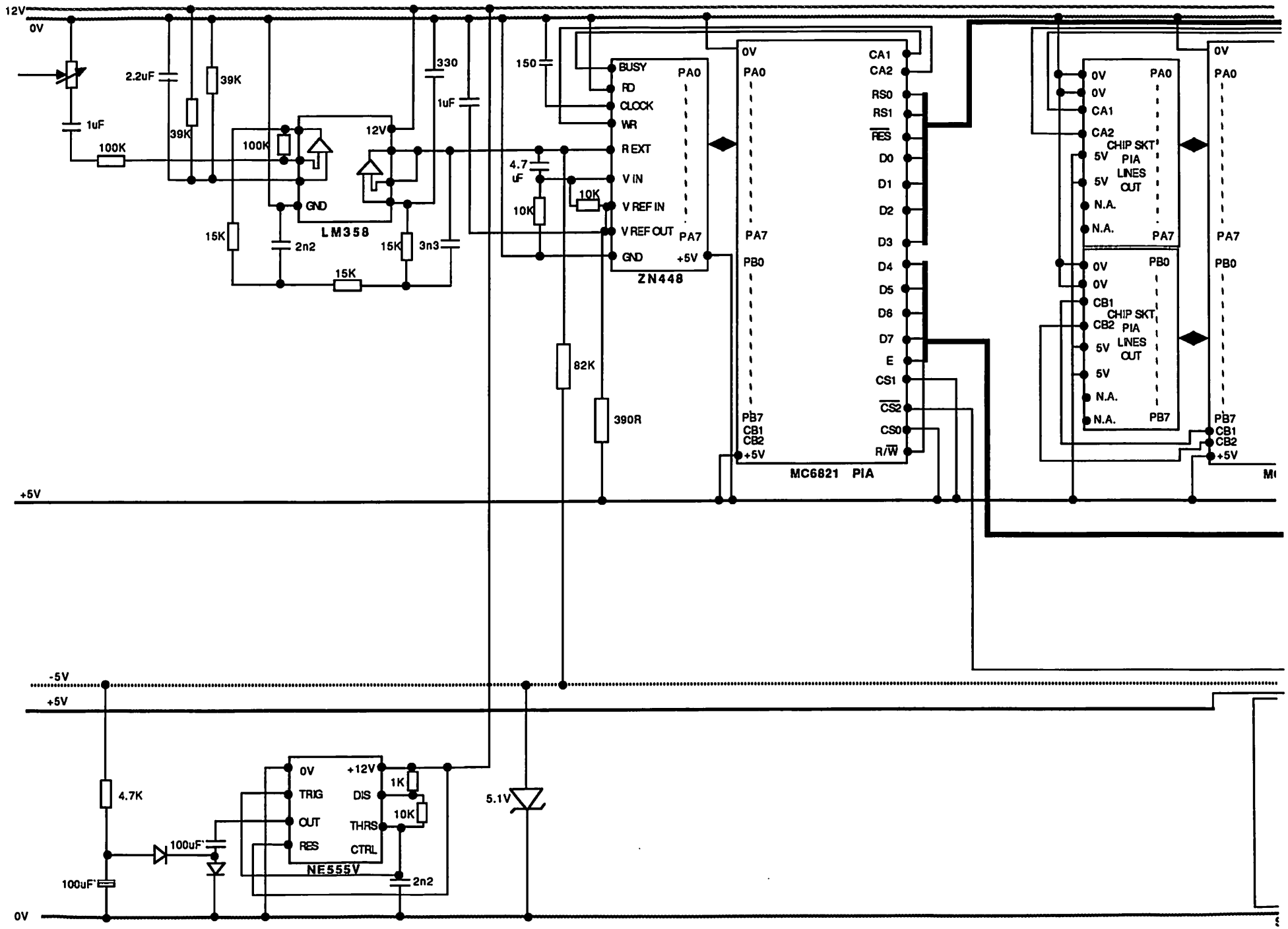
12V
0V
2.2uF
39K
1uF
100K
39K
100K
12V
330
1uF
150
GND
LM358
15K
2n2
15K
3n3
15K
4.7 uF
10K
10K
BUSY
RD
CLOCK
WR
R EXT
V IN
V REF IN
V REF OUT
GND
PA0
PA7
+5V
ZN448
82K
390R
0V
PA0
PA7
PB0
PB7
CB1
CB2
+5V
CA1
CA2
RS0
RS1
RES
D0
D1
D2
D3
D4
D5
D6
D7
E
CS1
CS2
CS0
R/W
MC6821 PIA
0V
0V
CA1
CA2
5V
5V
N.A.
N.A.
CHIP SKT
PIA
LINES
OUT
PA0
PA7
0V
0V
CB1
CB2
5V
5V
N.A.
N.A.
CHIP SKT
PIA
LINES
OUT
PB0
PB7
0V
PA0
PA7
PB0
PB7
CB1
CB2
+5V
+5V
-5V
+5V
4.7K
100uF
100uF
0V
TRIG
OUT
RES
+12V
DIS
THRS
CTRL
1K
10K
NE555V
2n2
5.1V
0V